PRE INSTALLATION GUIDE

FÖRINSTALLATIONSGUIDE

ANLEITUNG VOR DER INSTALLATION

預安裝指南

FOR

TopBrewer PRO

Scanomat
Download Center

Scanomat
Connection Diagram

Scanomat
Architect Pack
(2D/3D Files)

For TopBrewer Pro
Version: 4.0
01-01-2020

CONTENTS

» Introduction 3
» Product Matrix: Choose your setup 4
» Products Overview 5
» Space requirements: Basic Installation 6
» Space requirements: Extended Installation 7

CARPENTER & VENTILATION 8

» **Basic Installations**
» Example 1 - Pro Fridge A2 9
» Example 2 - Pro Fridge A3 10
» Example 3 - Duct rediverted 11
» **Extended / Special Installations**
» Example 1 - with cold water 12
» Example 2 - with two Pro 13
» Example 3 - behind a wall 14
» Faucet and Driptray 15
» Topmounted iPad holder 16
» Boxit Alu iPad Holder 17
» Driptrays 18

ELECTRICAL 19

» Electrical Requirements 20

PLUMBING 21

» Plumbing - adjacent cabinet 22
» Plumbing - same cabinet 23

Introduction

The operation of a TopBrewer Pro coffee system.

The TopBrewer Pro consists of a main unit, the coffee machine, the "swan neck" or tap that is installed through the tabletop and is height adjustable through the mounting bracket, a drained drip tray and a ventilation kit for the toe kick base. Additionally we offer optional accessories that are installed along side of the TopBrewer. These accessories include our extensive lineup of fridges, coolers and racks (overview on next page) that expands the machines capabilities to include milk, chocolate and ice water.

The TopBrewer is connected to the cold water supply and water is heated in professional flashheaters,meaning on demand. This works by water flowing through two 2,3kW aluminum coils when a drinks is ordered and a separate steam-coil producing steam for milk. The total heating capacity of the TopBrewer is thus 6,9 kW and it should be preferably connected to 400V, 3 phase, 16 amp (3-phase version) or 208-240V, single phase, 30 amp (single phase version) for the machine to perform to it's full potential. If only 208-240V, single phase, 10 amps is available, the machine can be re-programmed to run on a priority heating diverting power to the heating source needing it the most.

When ordering a milk drink, milk is pumped from the fridge (the pump is placed inside the fridge for sanitary reasons), and once a delivery is done the machine finishes with pushing the remaining milk out with cold water and thus cleaning the entire tubing. The water does not enter the cup but is afterwards ejected into the drain via the double-valve inside the fridge.
All water shall be purified using TopBrewer certified filtration. We require that the main inlet is filtered through a filter with a bypass so that the water reaches 4 dH°. A second filter with 0% bypass is used to completely remove lime/scale from the dedicated steamer inlet.

Installation, maintenance and warranty

The TopBrewer system can be installed in almost any location provided there is sufficient space for the machine as well as power, water supply and waste.
The TopBrewer must be placed with sufficient clearance so that it may slide out on its hinges. The fridge must be fitted so that the length of the tubes does not exceed 1,5 mm . It can be installed in an adjacent cabinet provided it maintains such maximum length. Accessories such as the Scanomat Cooler 45 and the Chocolate rack must also stay within the same maximum distances to ensure proper dispense quality.

All equipment must be fitted so that the they receive proper ventilation, with temperatures not exceeding 35°C, as this would harm components and void warranty.

Product Matrix

Choose your setup

Cabinet Layout

Configuration Choices

	LESS THAN 590 MM DEPTH	ALLOWS FOR MORE THAN 590 MM DEPTH	HIDDEN OR BEHIND THE WALL
WITH WATER	PAGE 12	PAGE 12	PAGE 13
WITHOUT WATER	PAGE 10	PAGE 9	PAGE 13
WITH HOT CHOCOLATE	N/A	PAGE 9	PAGE 13
WITH WATER AND HOT CHOCOLATE	PAGE 12	PAGE 12	PAGE 13

● Fridges ● Water coolers ● Racks

Products Overview

TB ● A1 ● A2 ● A3 ● B1 ● C2 ● C1 ● A4 ●

* OPTIONALLY WITH CO_2

UNIT DETAILS	TopBrewer Pro	ICE-Bank (A1)*	Pro-fridge (A2)	Pro-fridge Tall (A3)	Cooler 45 (B1)*	Pro-Fridge BiB (A4)	Slimrack (C1)	Chocolate rack (C2)
Installation Dimensions (WxDxH)	224 x 560 x 667 mm	236 x 569 x 428.5 mm	231 x 600 x 430 mm	231 x 438 x 600 mm	255 x 464 x 404 mm	520 x 560 x 760 mm	129 x 428 x 476,5 mm	230 x 323 x 237 mm
Packing Dimensions (WxDxH)	320 x 660 x 790 mm	246 x 579 x 488.5 mm	300 x 615 x 490 mm	241 x 443 x 660 mm	265 x 483 x 464 mm	530 x 575 x 820 mm	139 x 443 x 536,5 mm	240 x 338 x 297 mm
Weight, gross.	60 kg	25 kg	20 kg	20 kg	22 kg	31 kg	9 kg	8 kg
Weight, net.	56 kg	22 kg	17 kg	17 kg	19 kg	28 kg	6 kg	5 kg
Bean/Carton Capacity	2 x 1.4 kg	Up to 4 l.	Up to 8 l.	Up to 8 l.	-	3x 10 l. Bag-in-box (up to)	10 l. Bag-in-box	3 l. Bag-in-box
Throughput/hour	180 cups	25 L	-	-	45L	-	-	-
Approvals	CE, ETL/UL, CB, NSF	CE	CE, ETL/UL	CE, ETL/UL	CE, ETL/UL, NSF	CE, ETL/UL	CE	CE
Power	**EU, 6900 Watt**: 220-240V, 30 amp, single phase **OR** 400V, 16 amp, 3-phase	220-240V, 10 Amp. 3-pin plug point for each unit.v					31V DC from TopBrewer	
	EU, 2300 Watt: (Priority Heating) 220-240V, 10 amp, single phase							
	Canada & USA: L6-30 twist lock plug (supply male/female connections)	115V, 60 Hz, 10 Amp Plug point for each unit.						
	United Kingdom: 32 Amp - Commando fitting (supply male/female connections) 1 x 10 Amp single phase (Priority heating)	115V, 60 Hz, 10 Amp Plug point for each unit.						
Water	Direct Water Connection, 3/4" type shutoff valve Water pressure: 200kPa (2 Bar) - 600 kPa (6 Bar)		-	-	Direct Water Connection, 3/4" type shutoff valve Water pressure: 200kPa (2 Bar) - 600 kPa (6 Bar)	-	-	-
Filtration	TopBrewer water filters fitted in a location adjacent to the TopBrewer. See plumbing section. Dedicated steam filter required (Pure 50, 0% bypass)	TopBrewer ActiveCoal 10.000, optional, purifies the water with active coal	-	-	TopBrewer ActiveCoal 10.000, optional, purifies the water with active coal technology.	-	-	-
Drainage	Waste U-pipe, ø40mm. Manifold/drain plug (included, see Plumbing section) is inserted and components are connected here.							
Ventilation	Duct Fan Ventilation required. Cooler produces a lot of heat, which needs to be able to exit as per installation instructions in Carpenter section							

Space requirements

Basic Installation

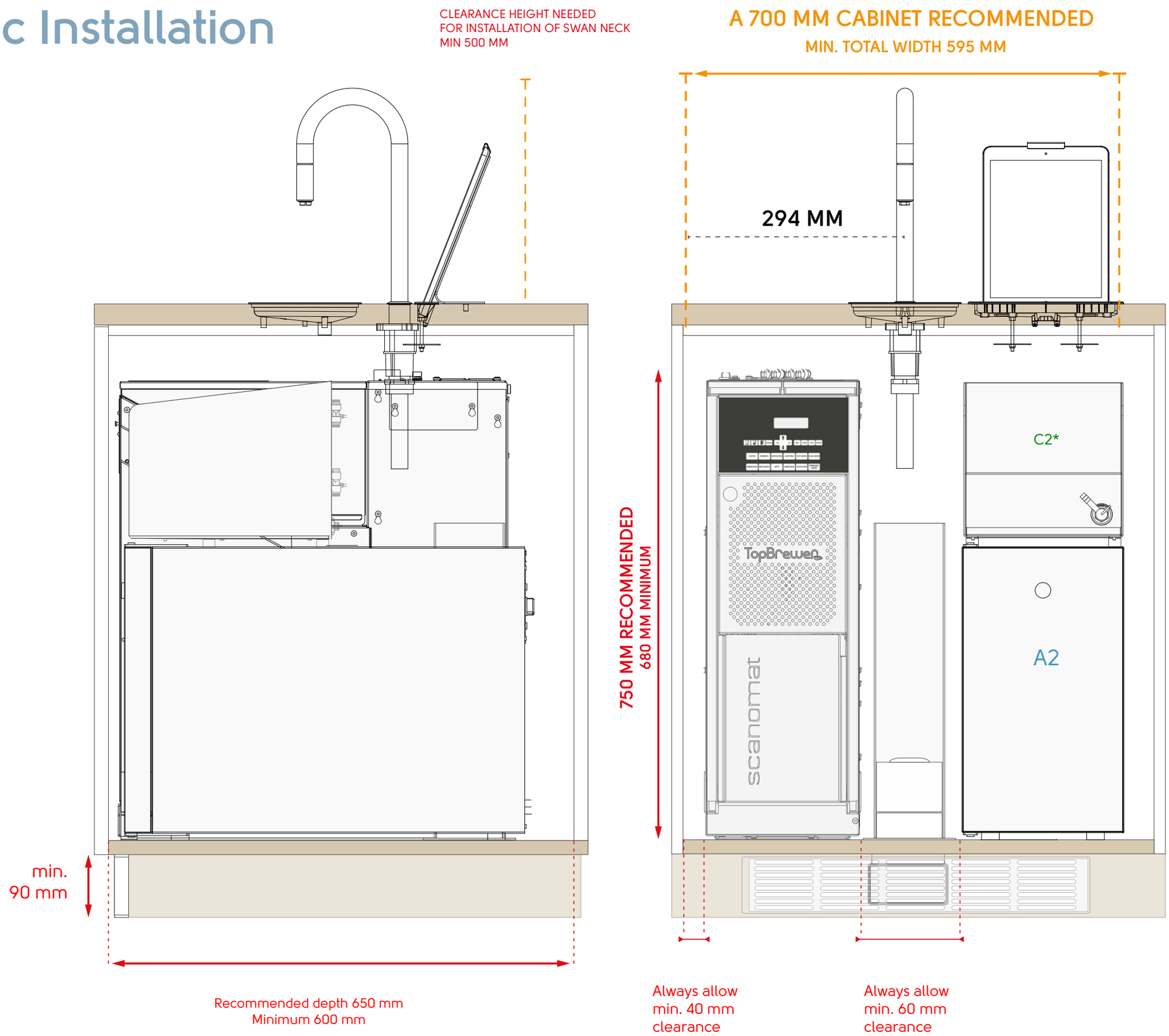

Space requirements

Extended Installation

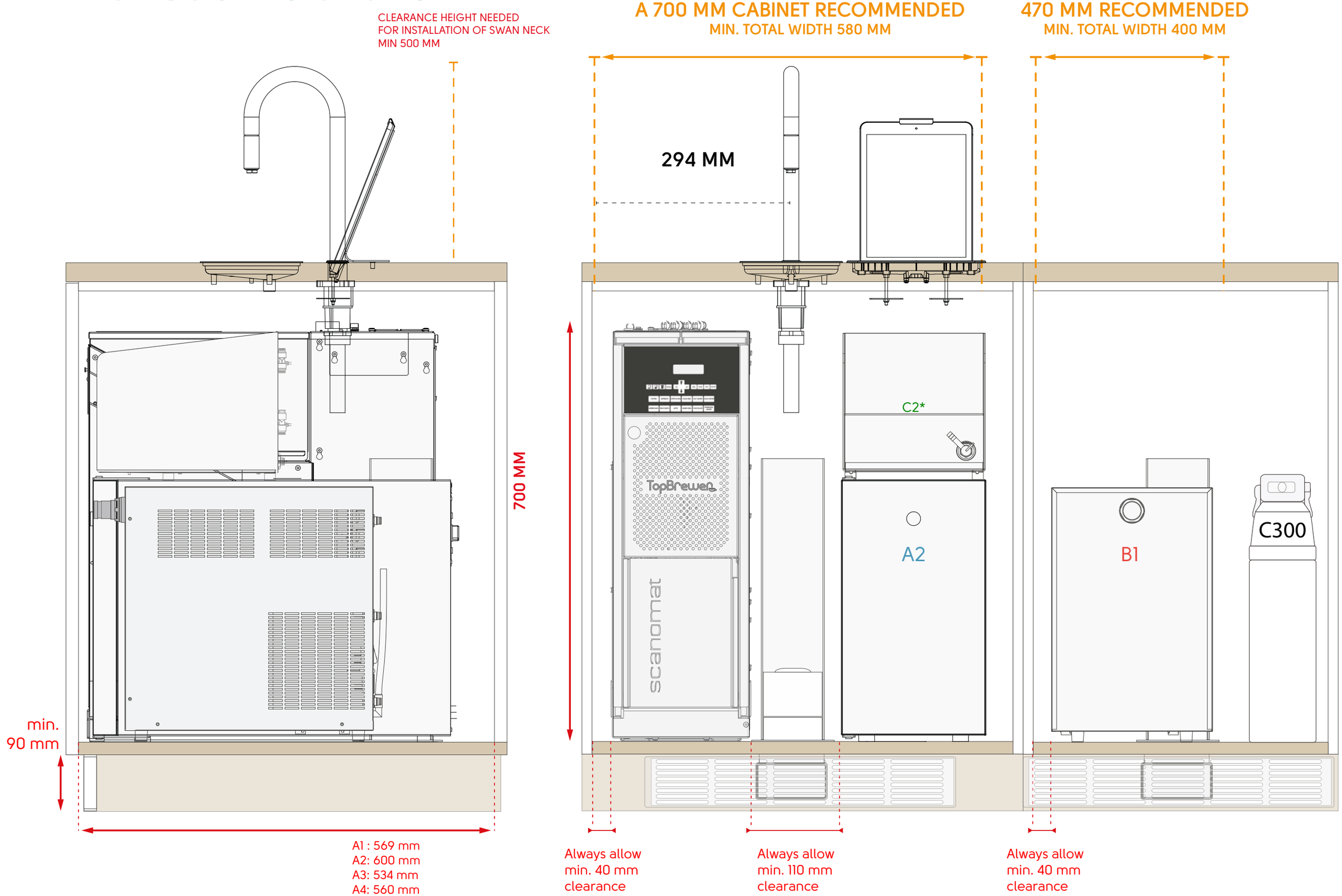

CARPENTER

SNICKARE

ZIMMERMANN

木匠

Carpentry preperations

Basic Installation

Ventilation pipe through toekick using SKU 4302774

Example 1

Using: TB + A2 or A1 + C2*

AIR EXHAUST SHOULD REMAIN UNOBSTRUCTED

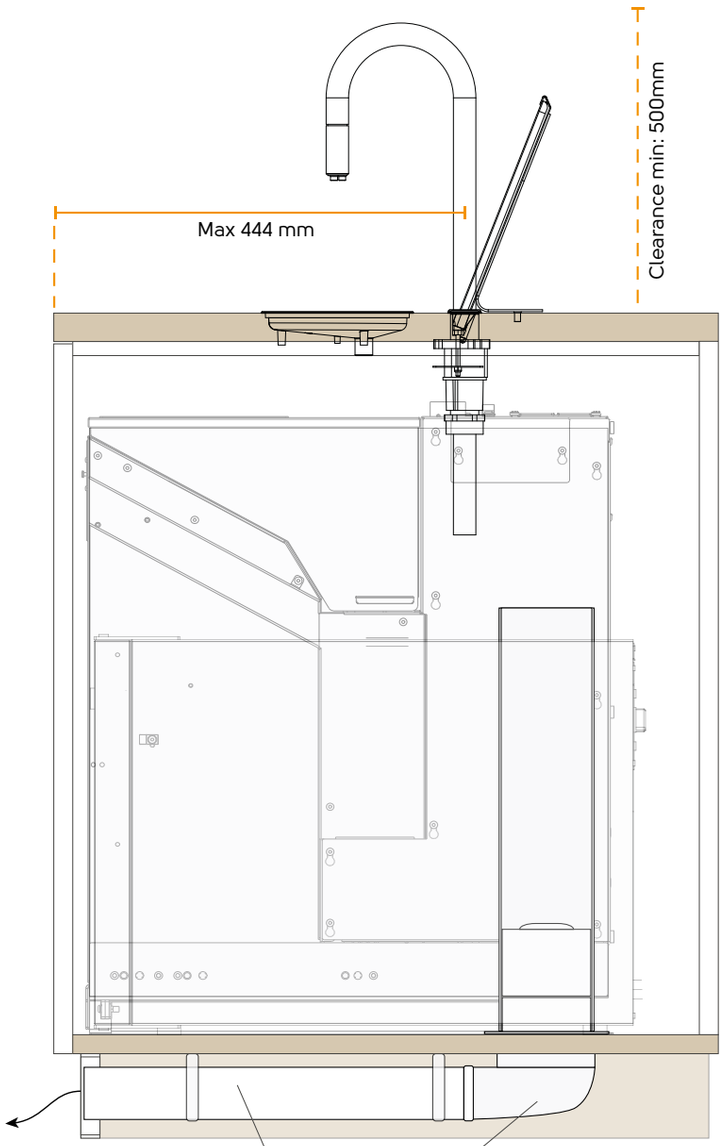

Flat Channel Duct + Angle
Sold seperately as SKU
4302789 and 4302790

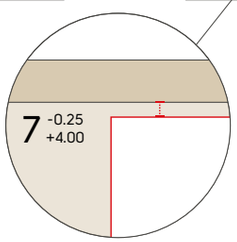

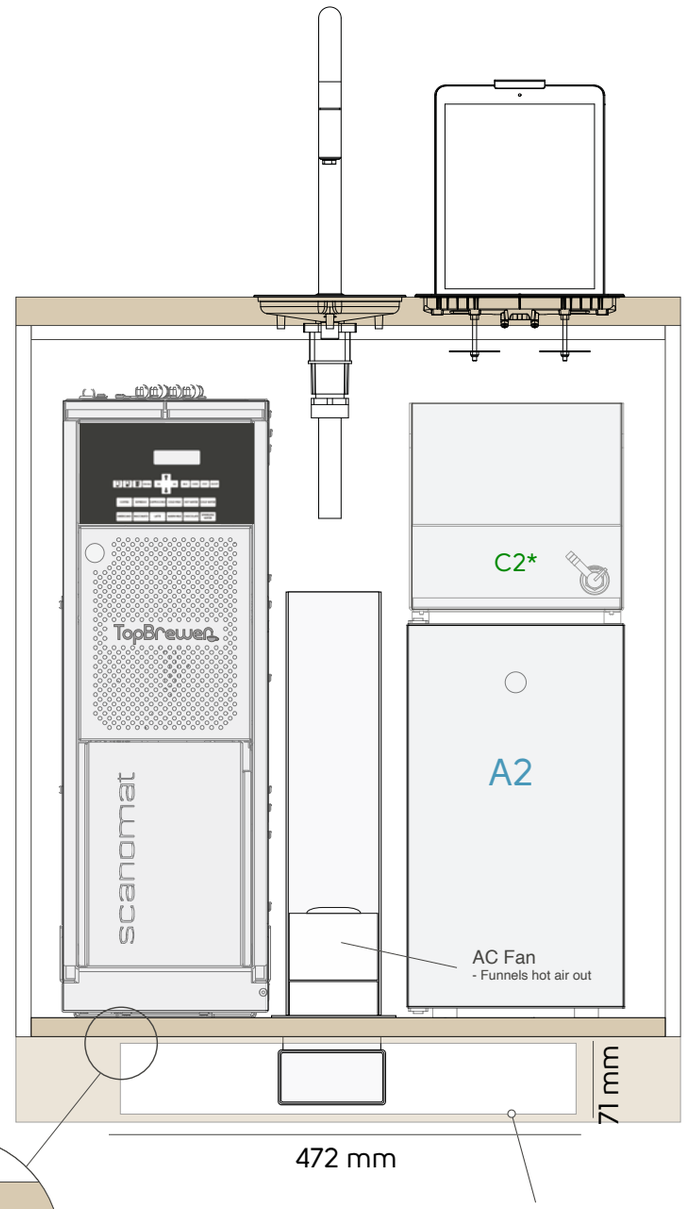

Cut-out for standard aluminium grate.

A custom design can also be adapted.

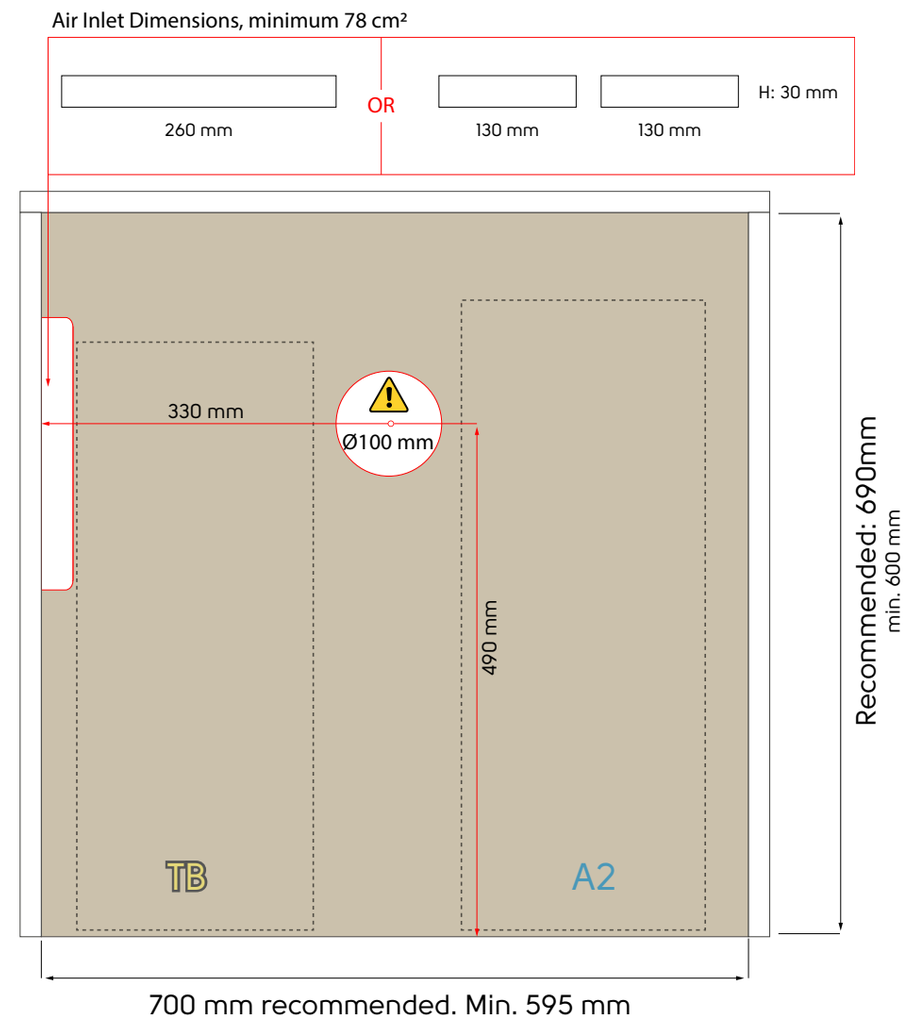

Side

Front

Top View

Carpentry preperations

Basic Installation

Ventilation pipe through toekick using SKU 4302774

Example 2

Using: TB + A3

AIR EXHAUST SHOULD REMAIN UNOBSTRUCTED

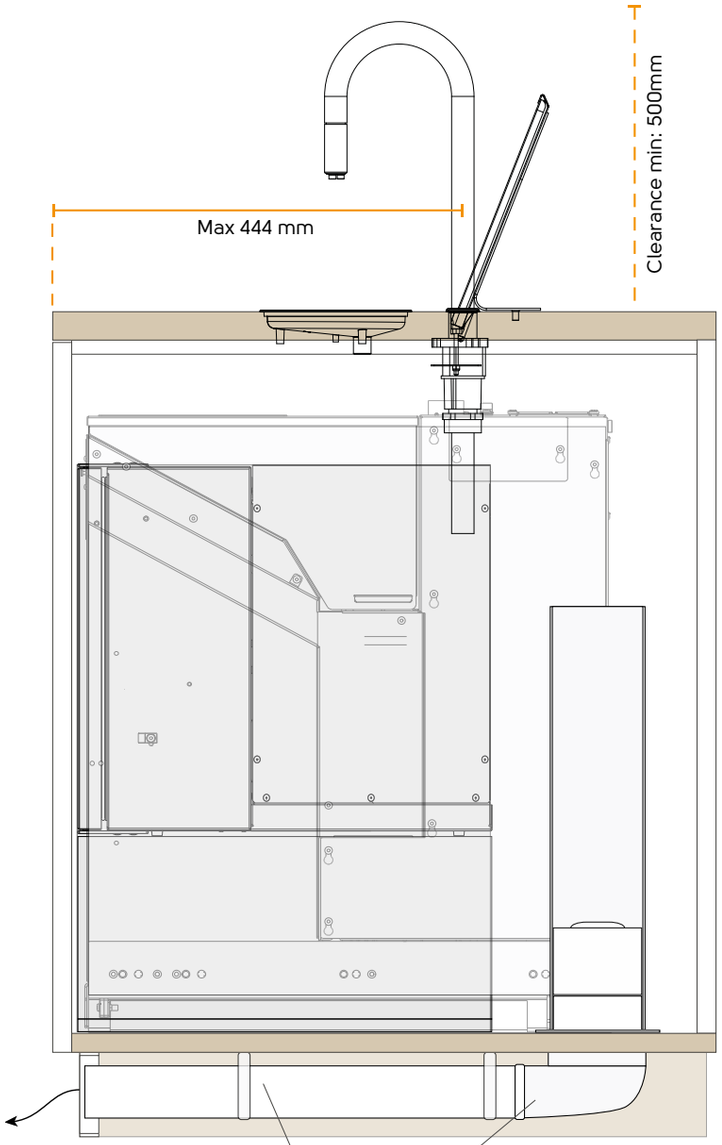

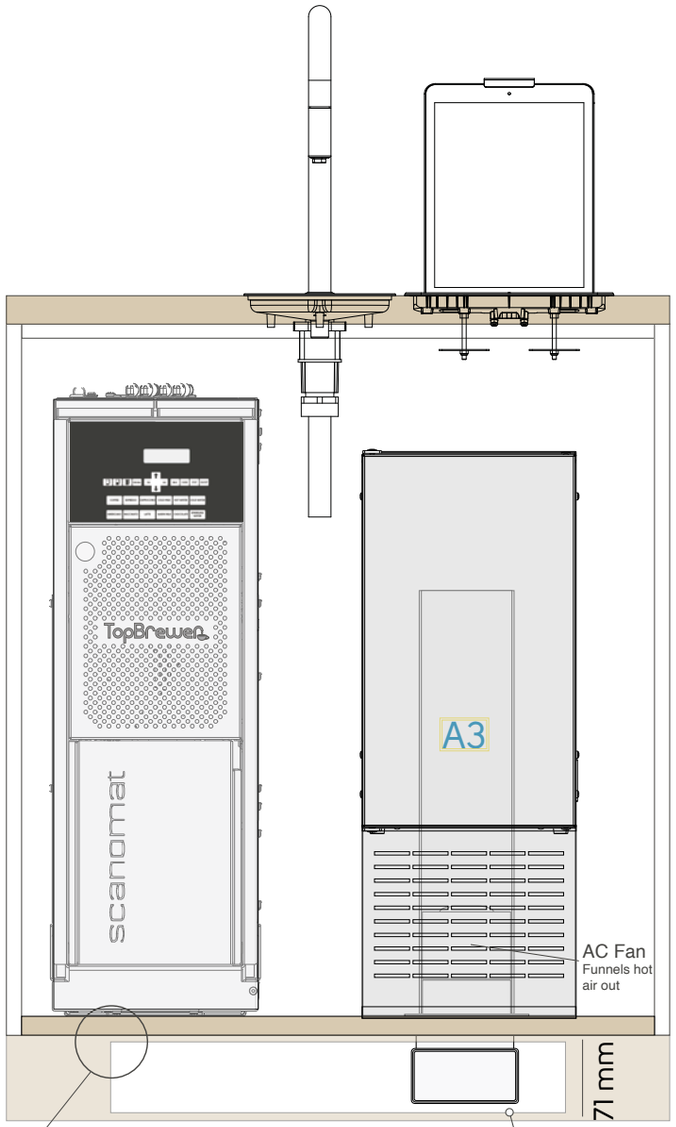

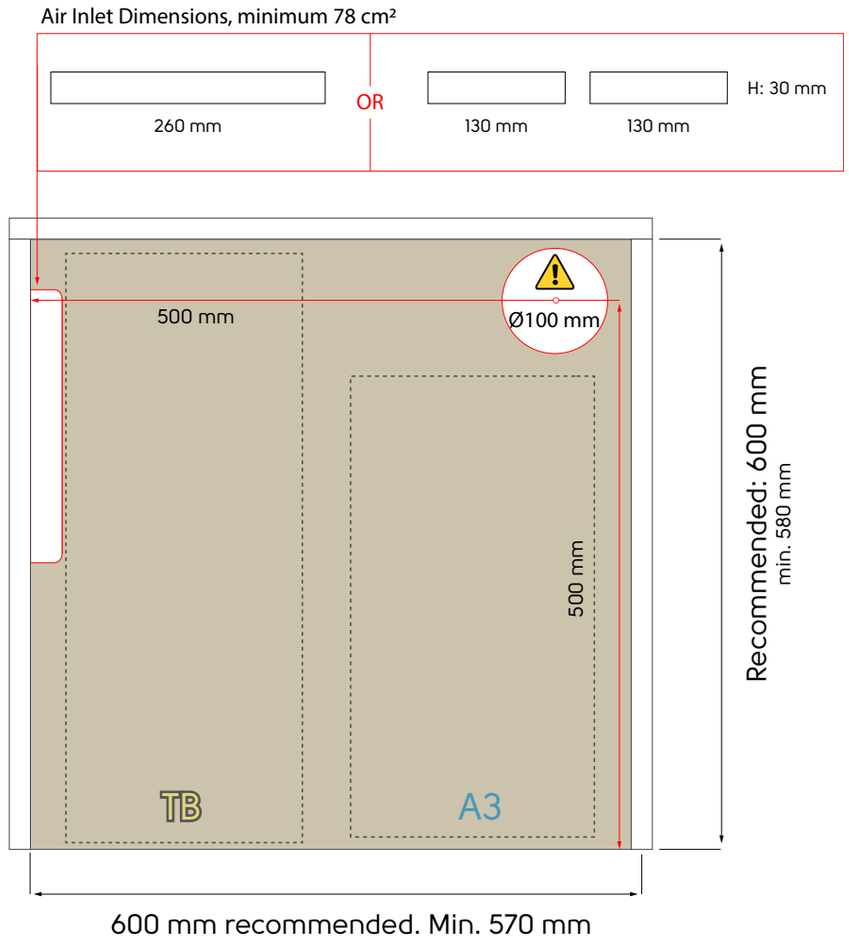

Flat Channel Duct + Angle
Sold seperately as SKU
4302789 and 4302790

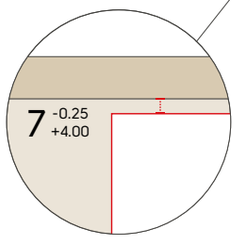

Cut-out for standard aluminium grate.

A custom design can also be adapted.

Side

Front

Top View

Carpentry preperations

Basic Installation

Ventilation pipe through toekick using SKU 4302774 + flex tube

Example 3

Using: TB + A1, A2 or A3 + C2*

AIR EXHAUST SHOULD REMAIN UNOBSTRUCTED

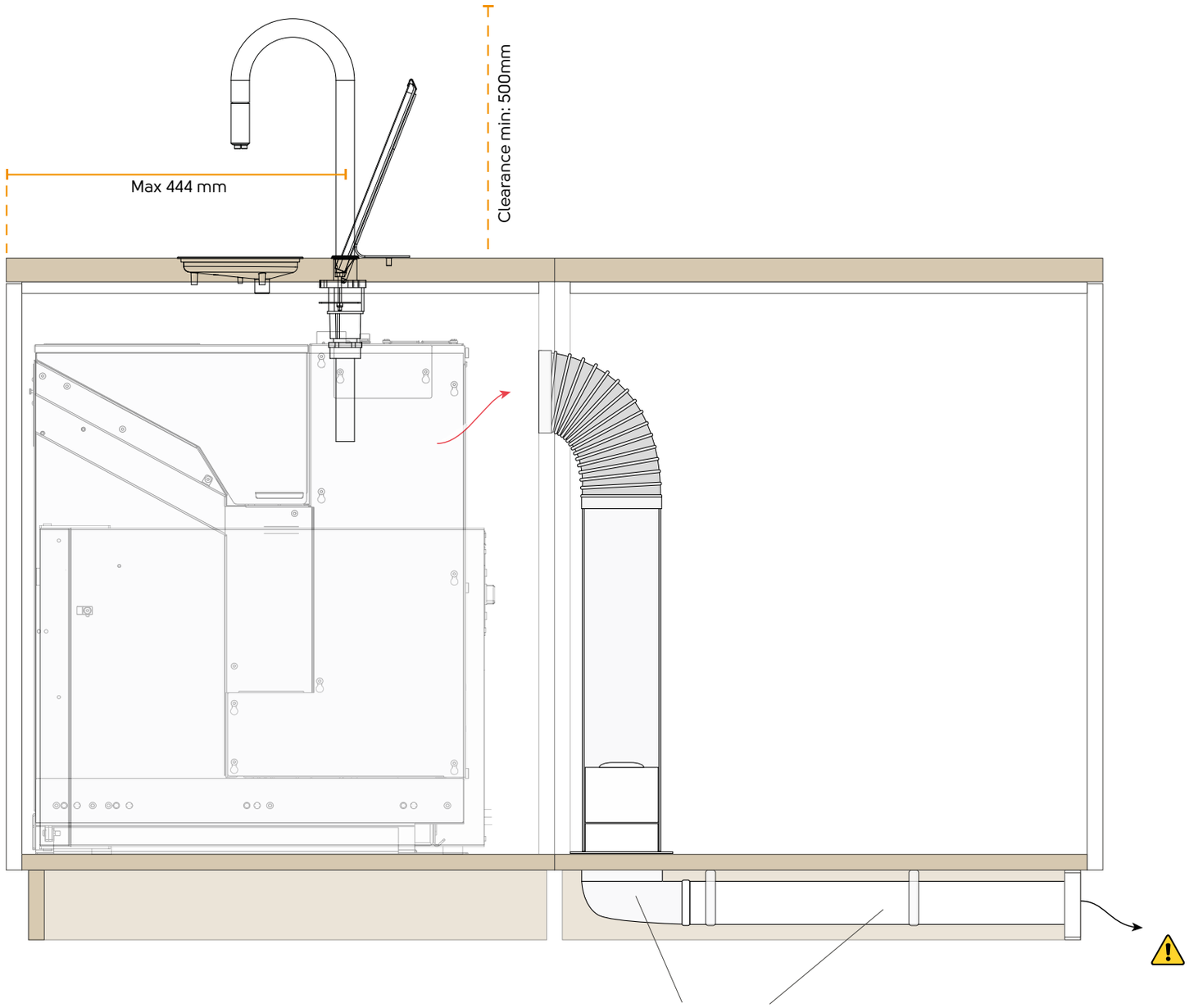

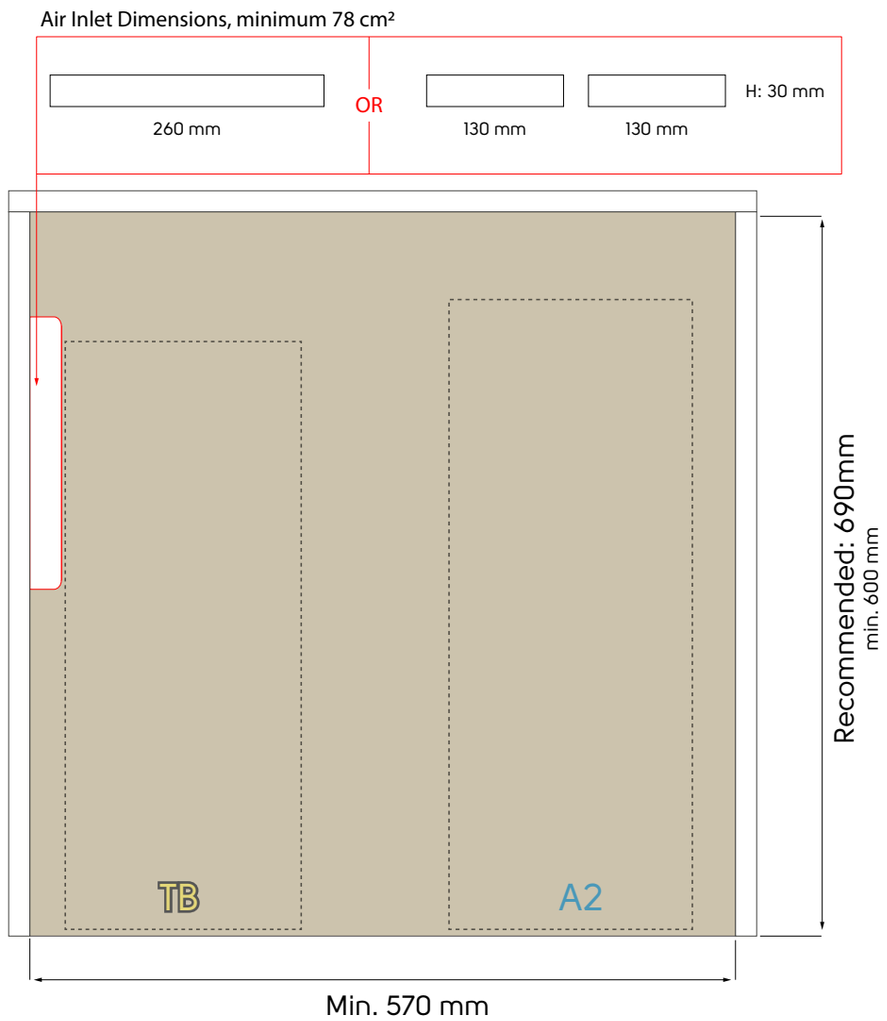

This configuration, using a flextube, allows for exhaust diversion to an adjacent cabinet. Shown is an example. Also used is flat Channel Duct + Angle. Sold seperately as SKU 4302789 and 4302790

Side

Front

Top View

Carpentry preperations

Extended Installation

Adding Cooler 45 for ice water option

Example 1

Using: TB + A2 or A3 + B1 + C2*

AIR EXHAUST SHOULD REMAIN UNOBSTRUCTED

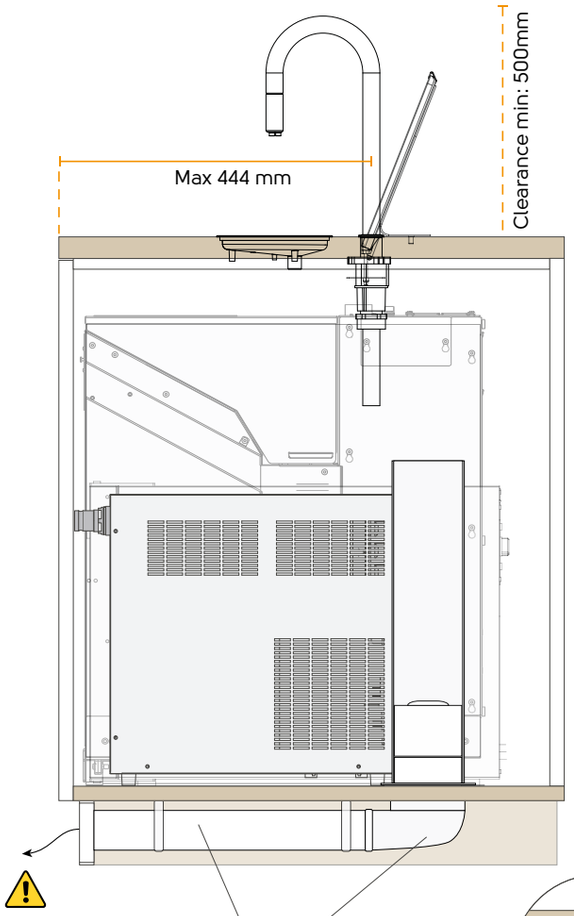

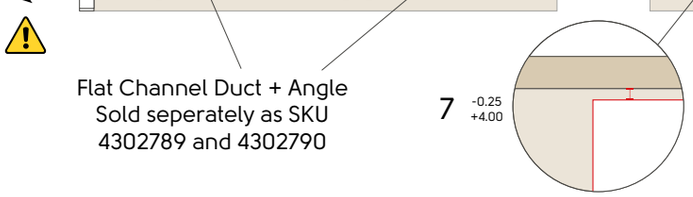

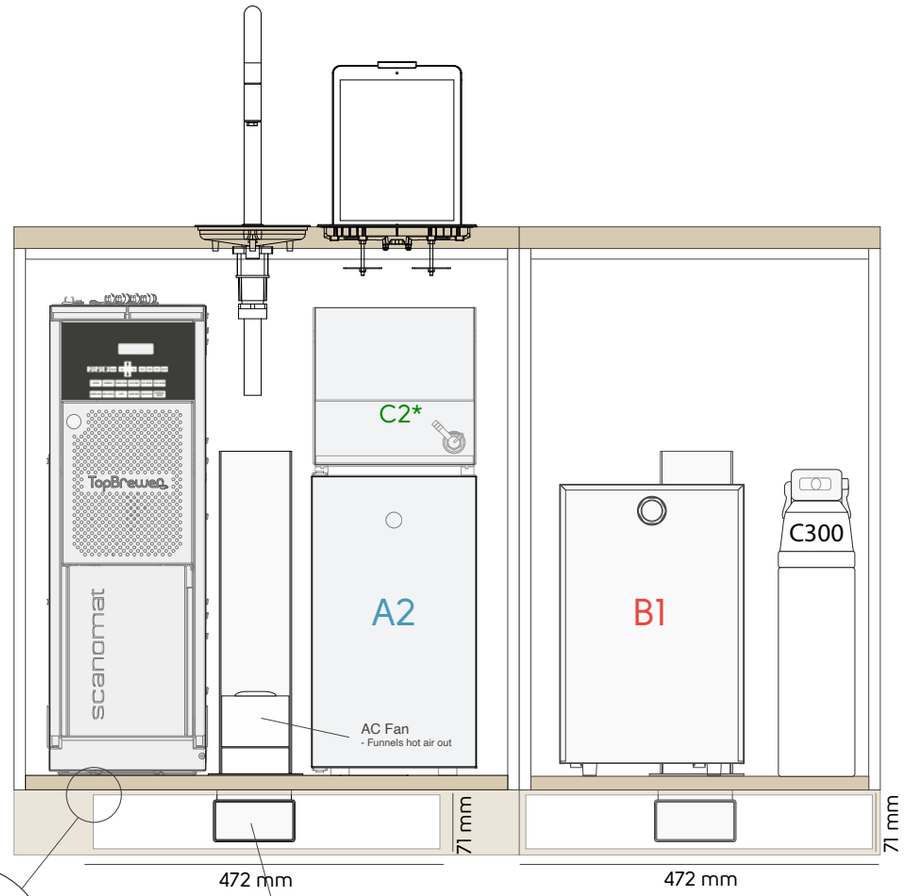

Example here using included aluminum grate.

A custom design can also be mitigated.

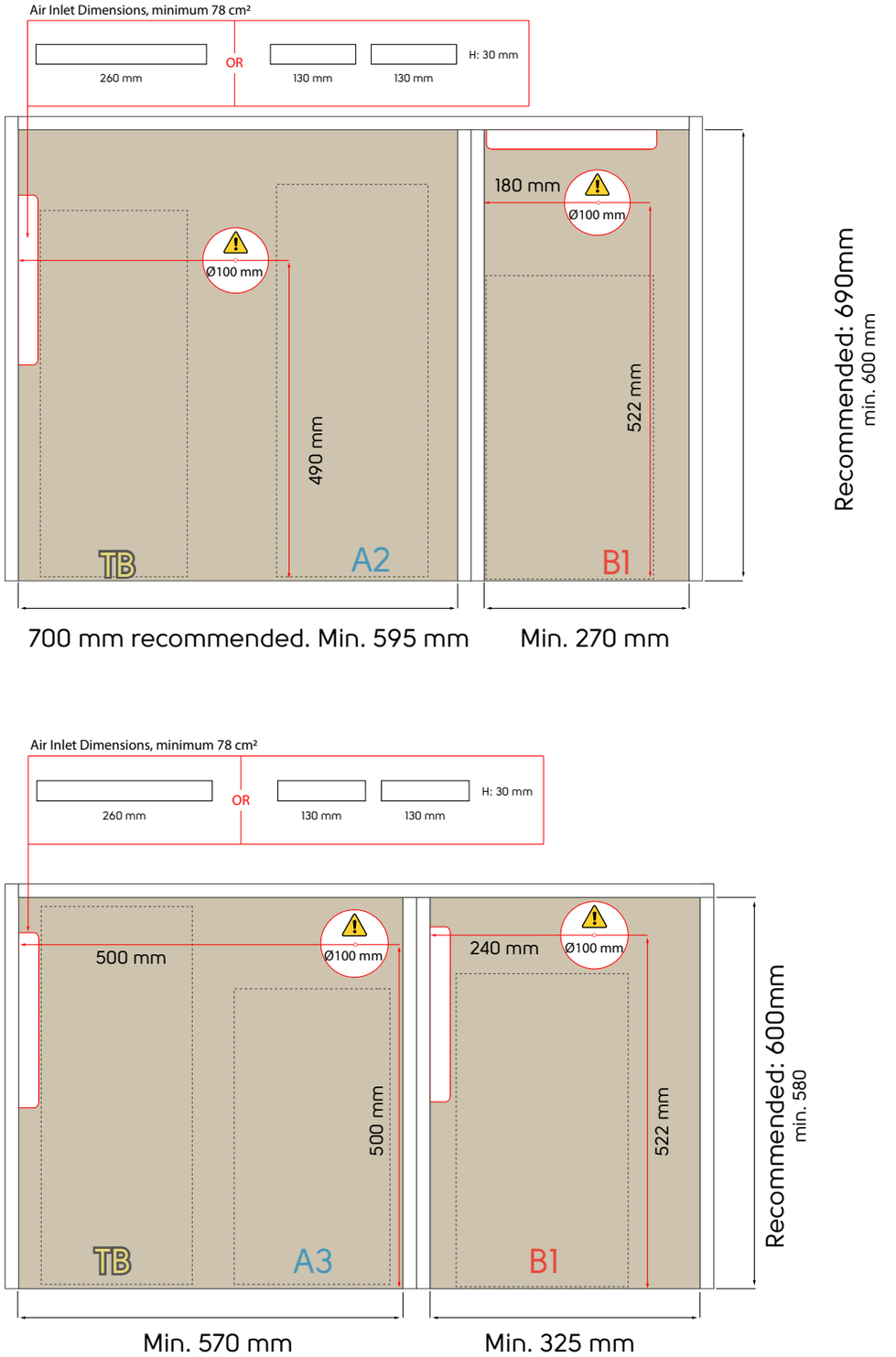

Side

Front

Top View

Carpentry preperations

Extended Installation

Two Pro's sharing a singel Pro-fridge

Example 2

Using: TB + A2 or A3 + TB

AIR EXHAUST SHOULD REMAIN UNOBSTRUCTED

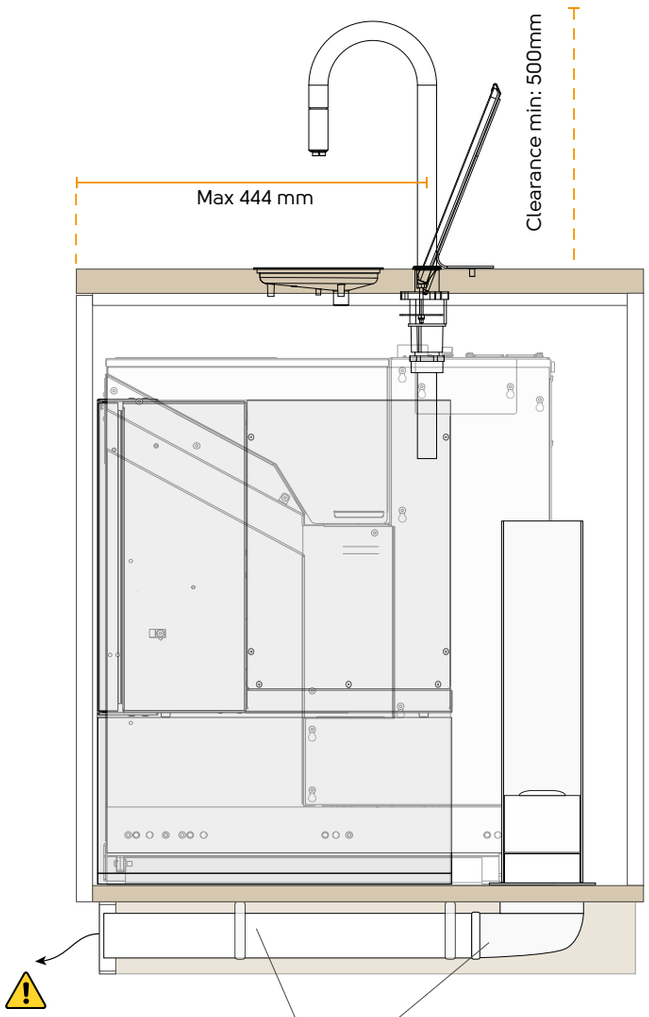

Side

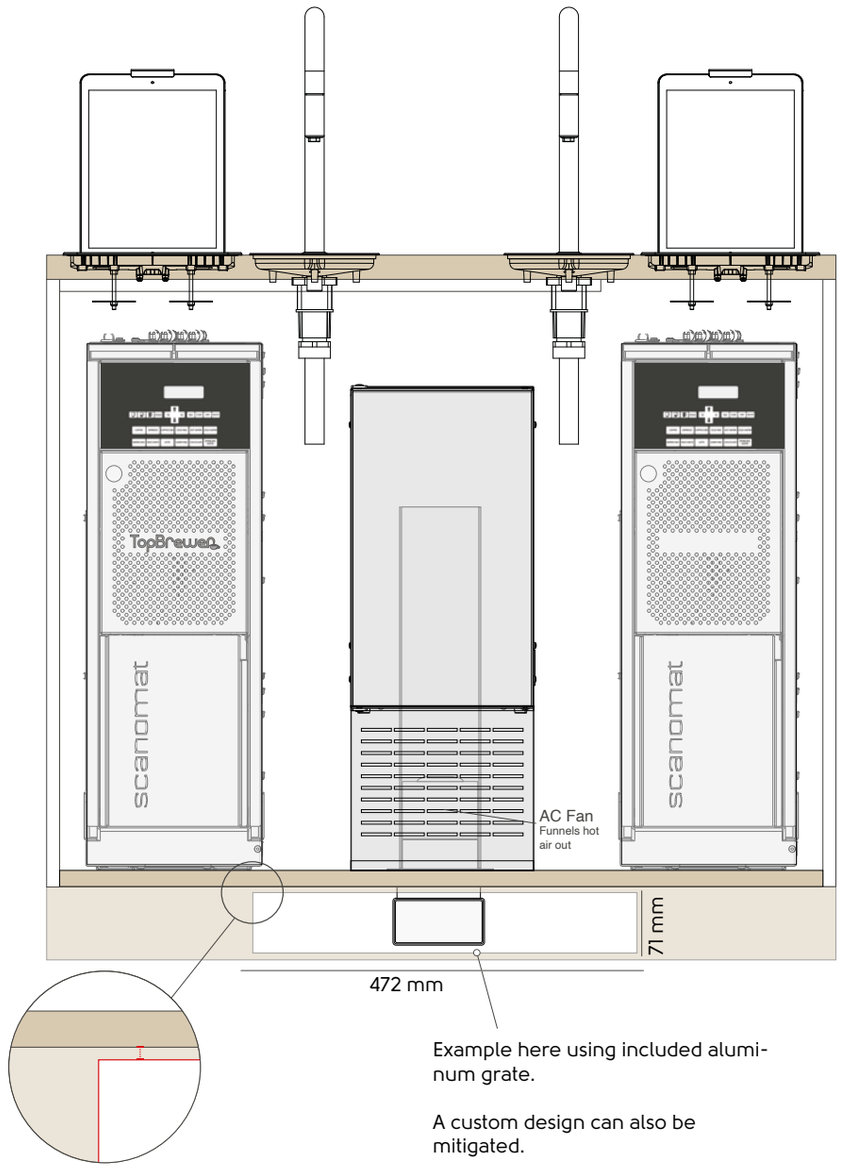

Front

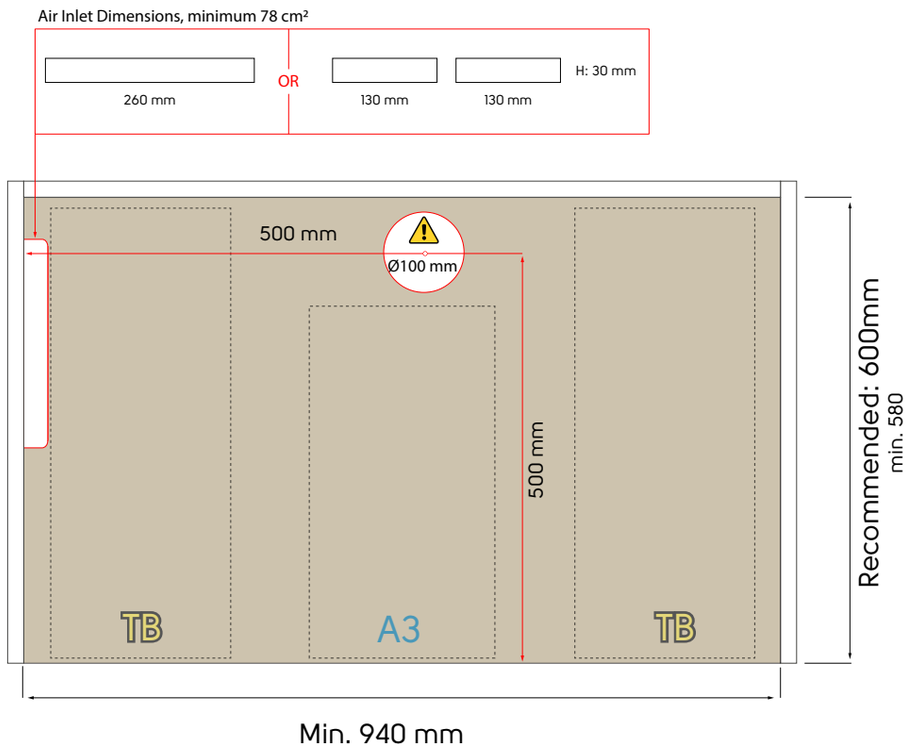

Top View

Carpentry preperations

Special Installation

Special example of behind-the-wall utilizations

CLICK HERE TO
SEE EXAMPLE

Example 3

Using: TB + A1, A2 or A1 + C2*

AIR EXHAUST
SHOULD REMAIN
UNOBSTRUCTED

Using Bluetooth external antenna,
length 1,5 m.
SKU 4302690

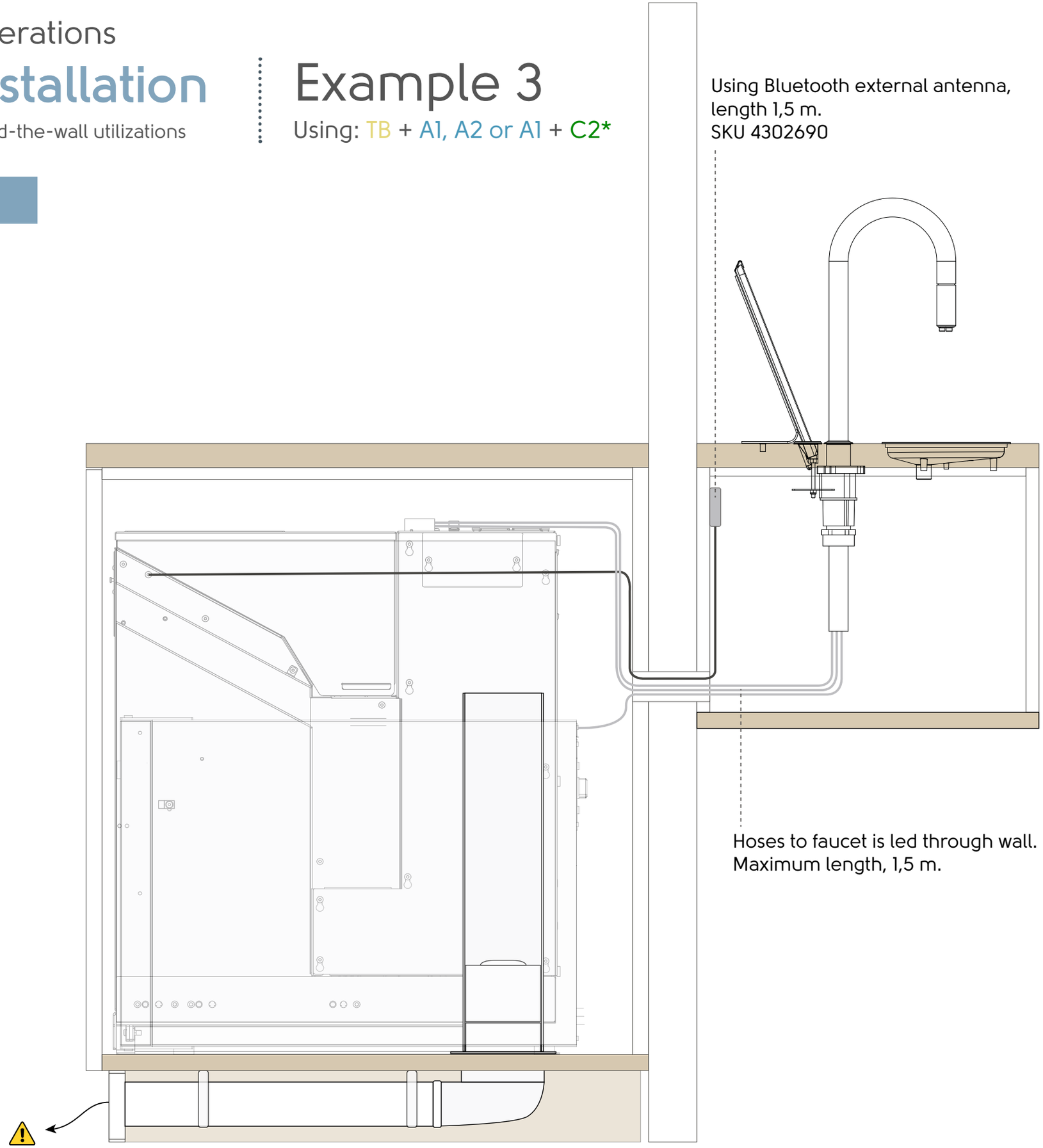

Hoses to faucet is led through wall.
Maximum length, 1,5 m.

Swan Neck & Driptrays

Overview of positioning

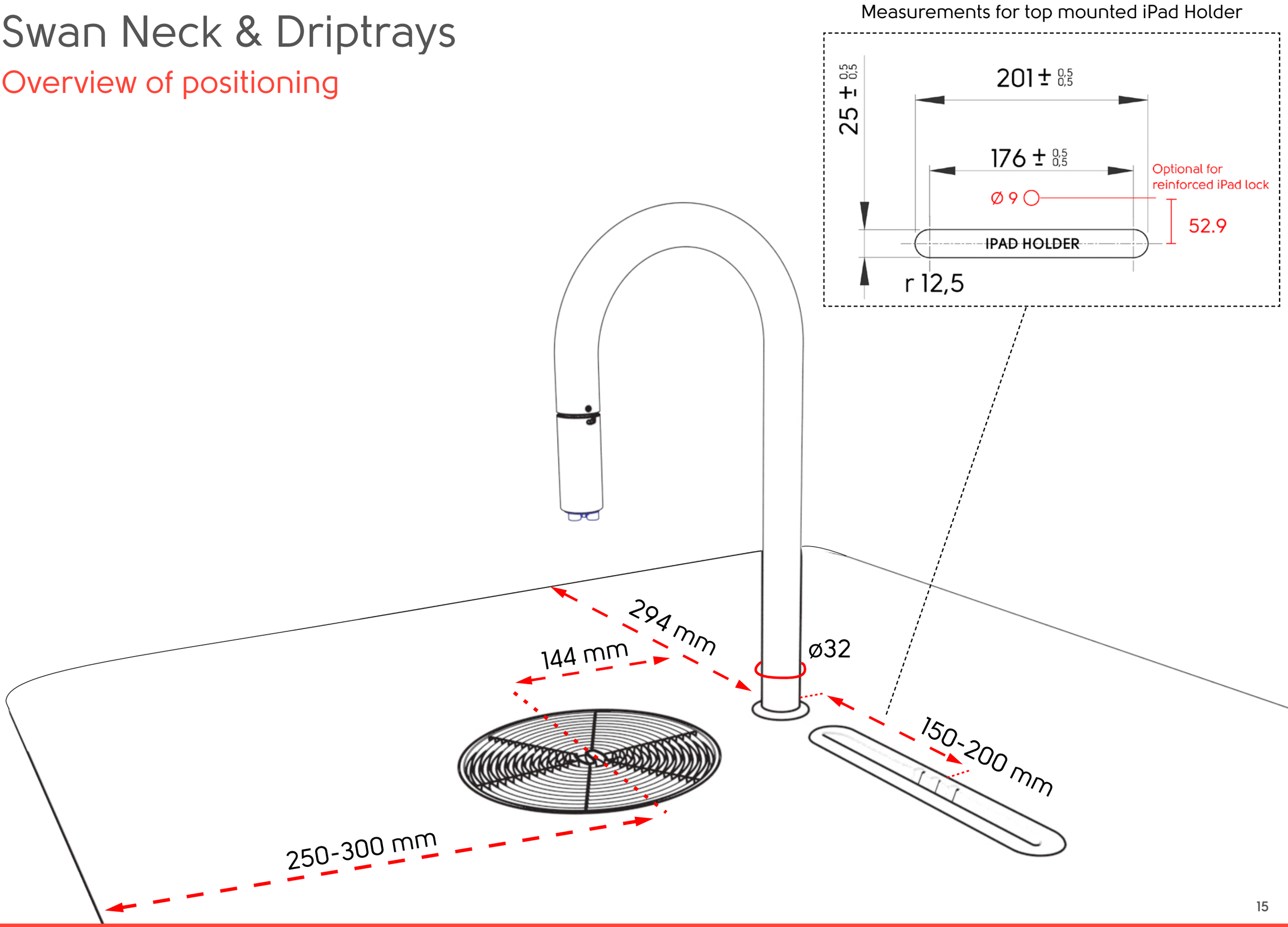

TopBrewer topmounted iPad Holder + Lock

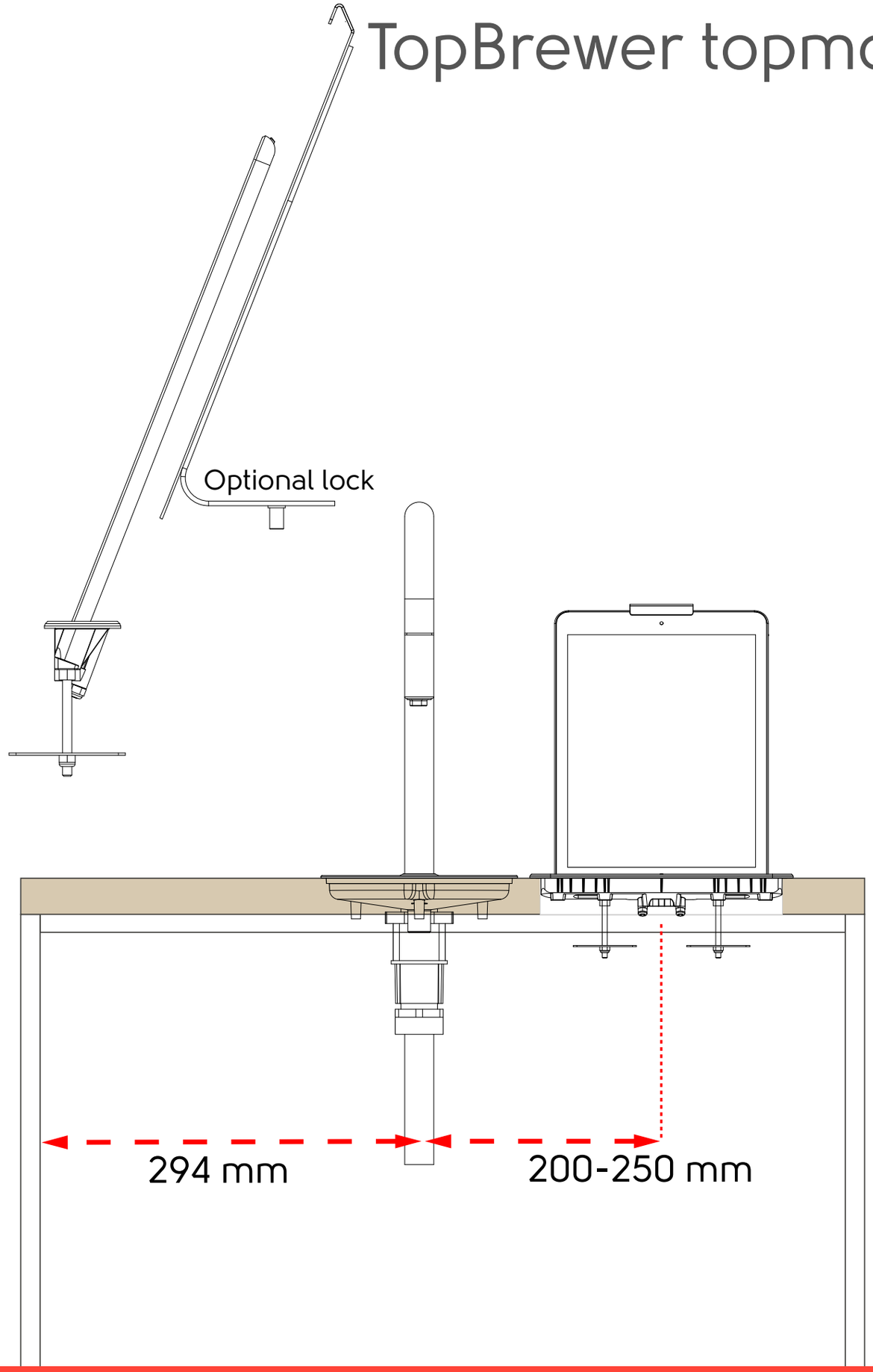

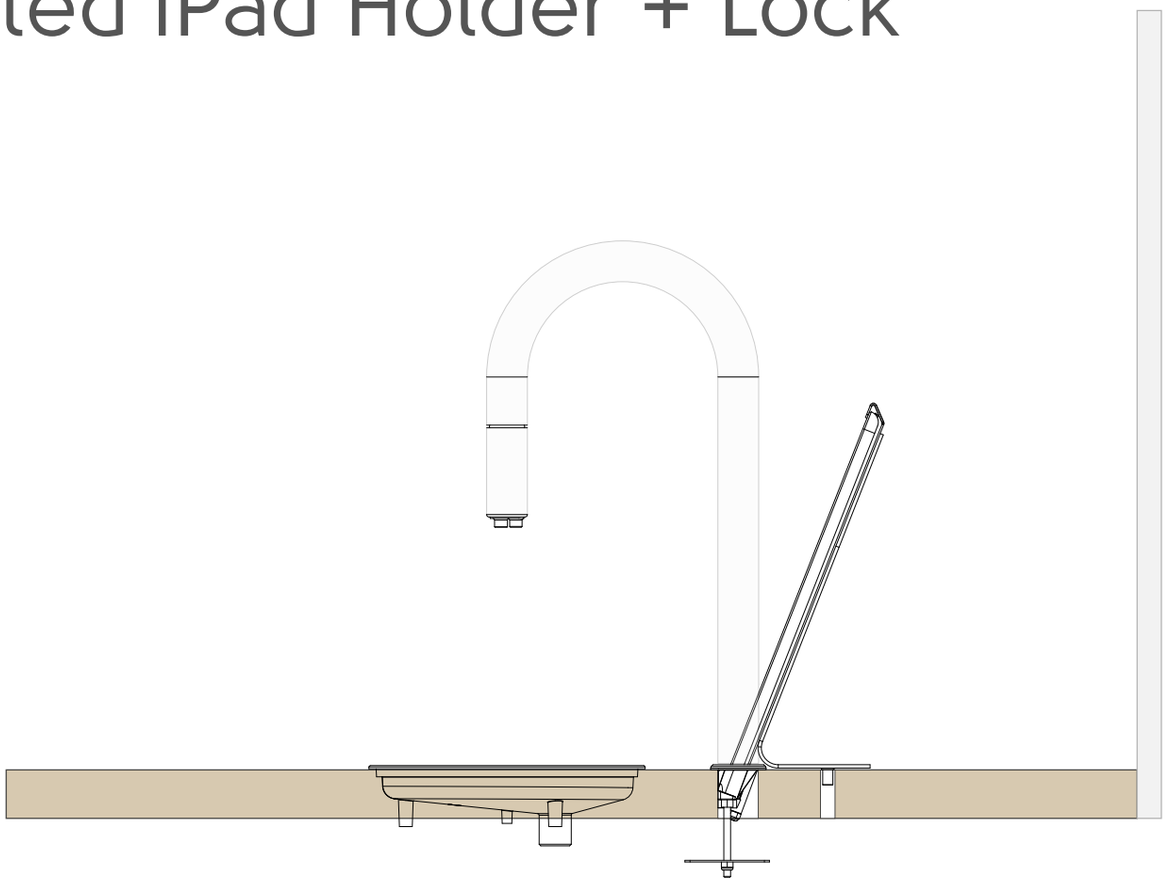

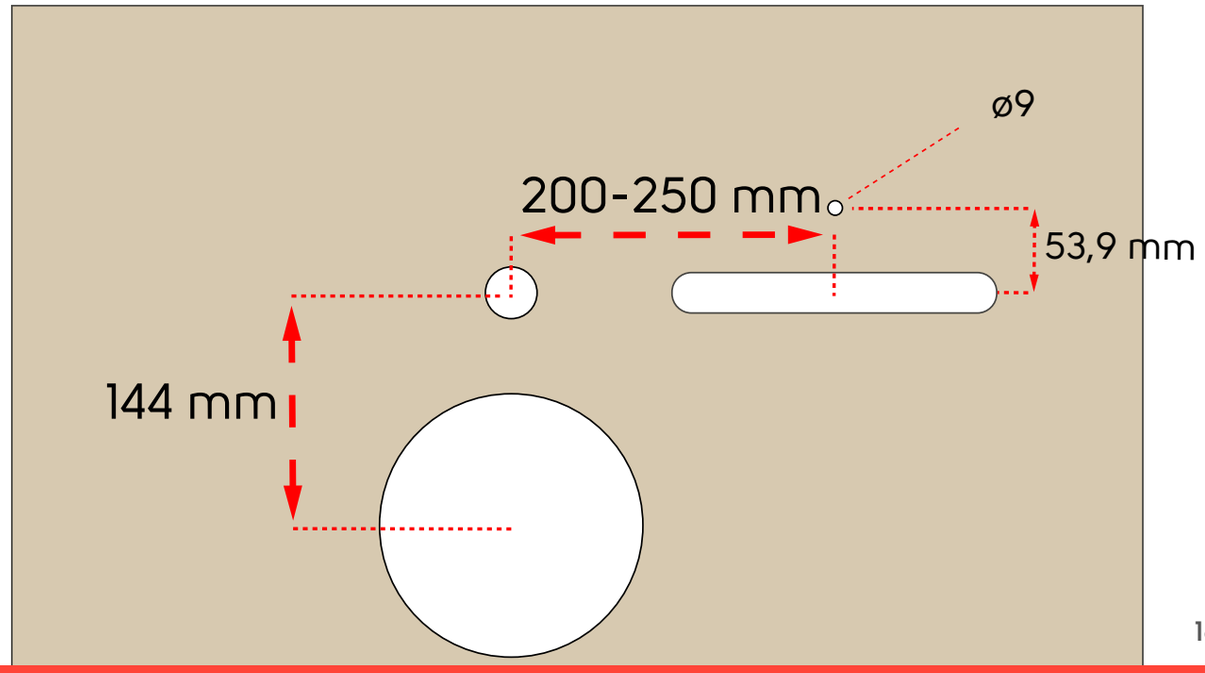

BOXIT (Table Mount or Wall-Mount options)

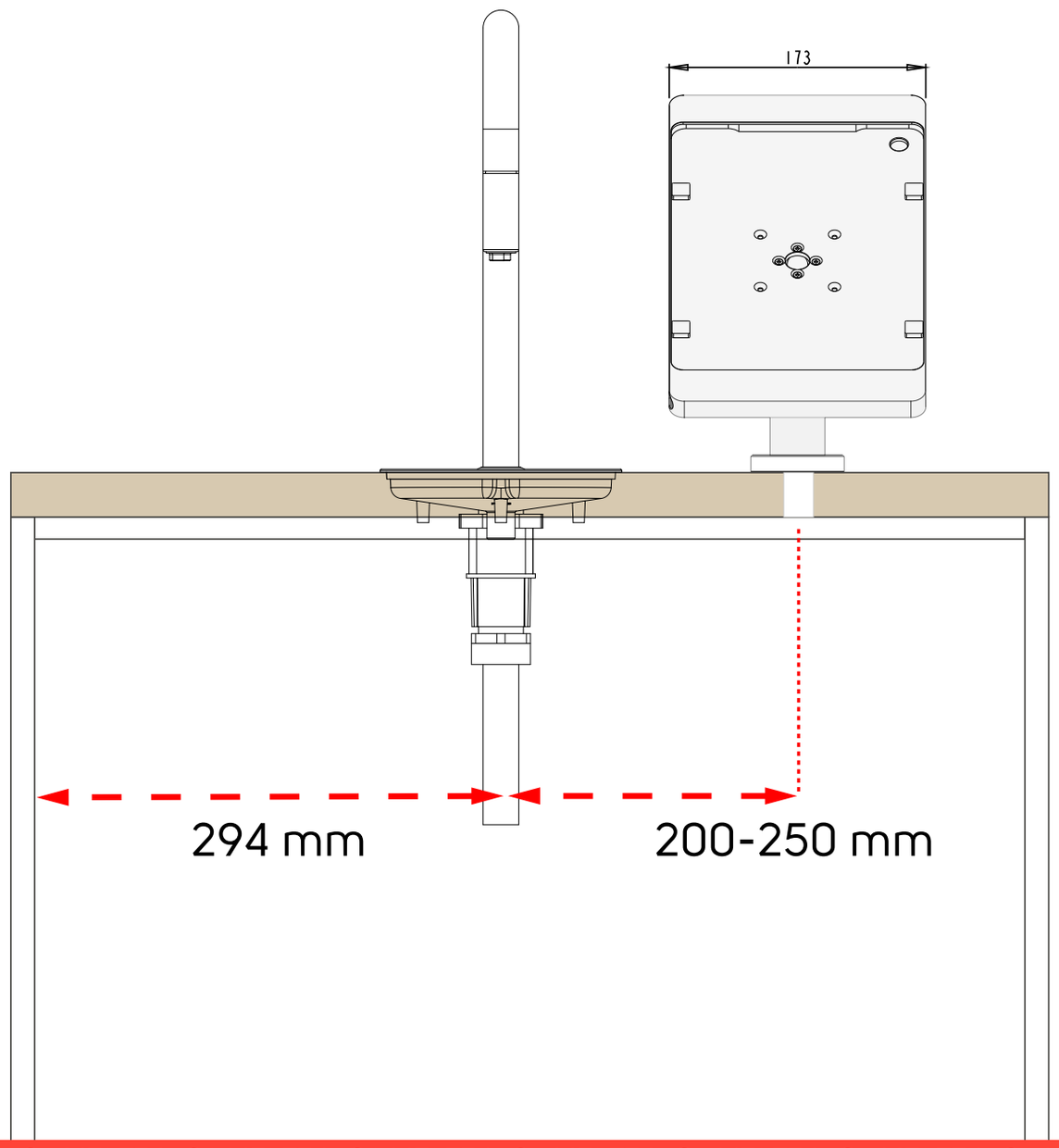

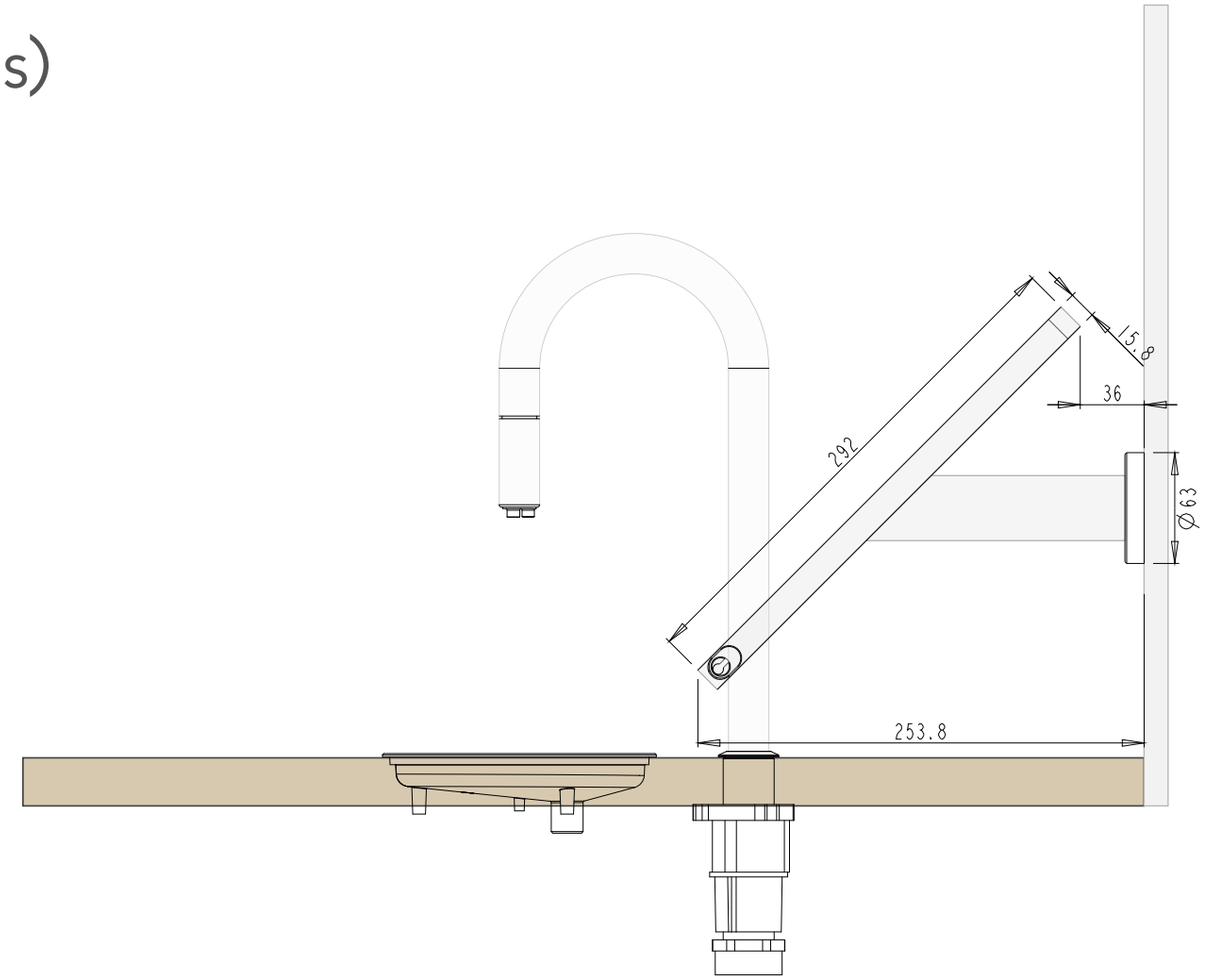

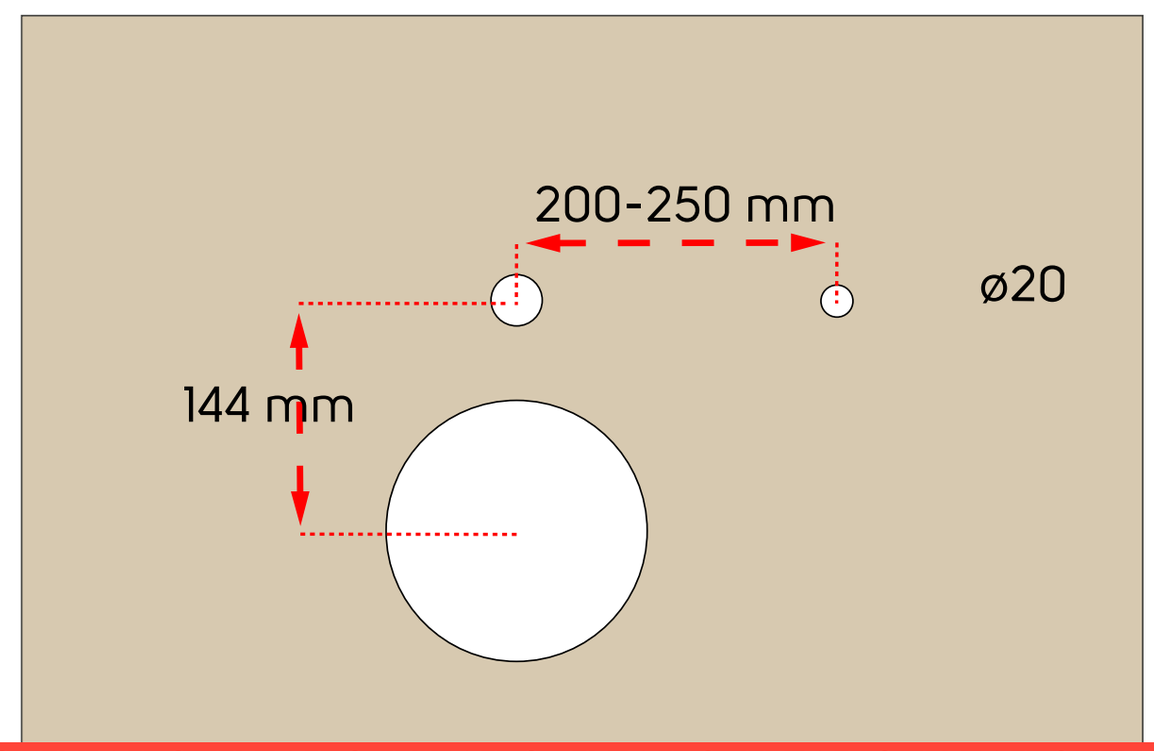

Cut out sheet - Swan neck + Driptray

NOTE that this driptray is best used for water resistent tabletops such as Granite, Marble or Corian. If wood, make sure poures are completely sealed.

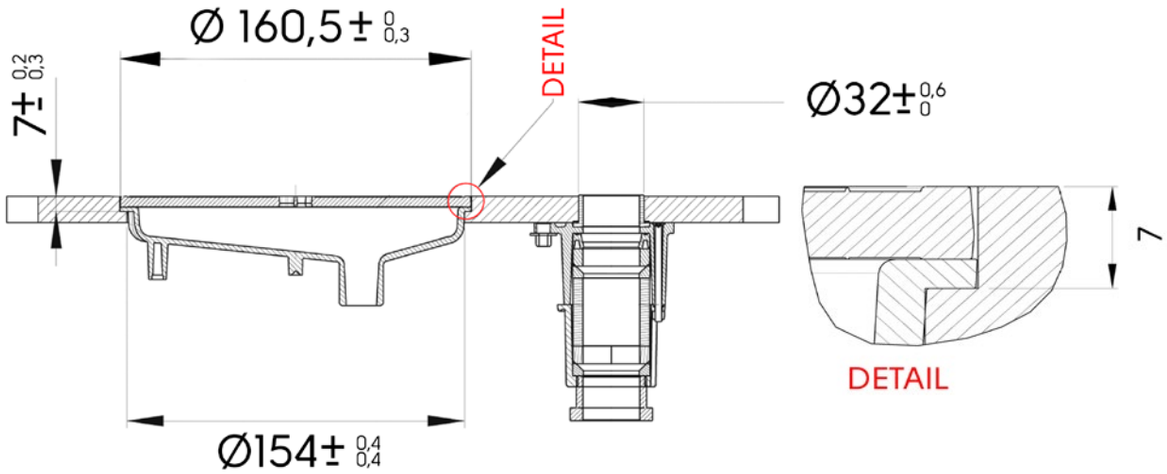

SIDE

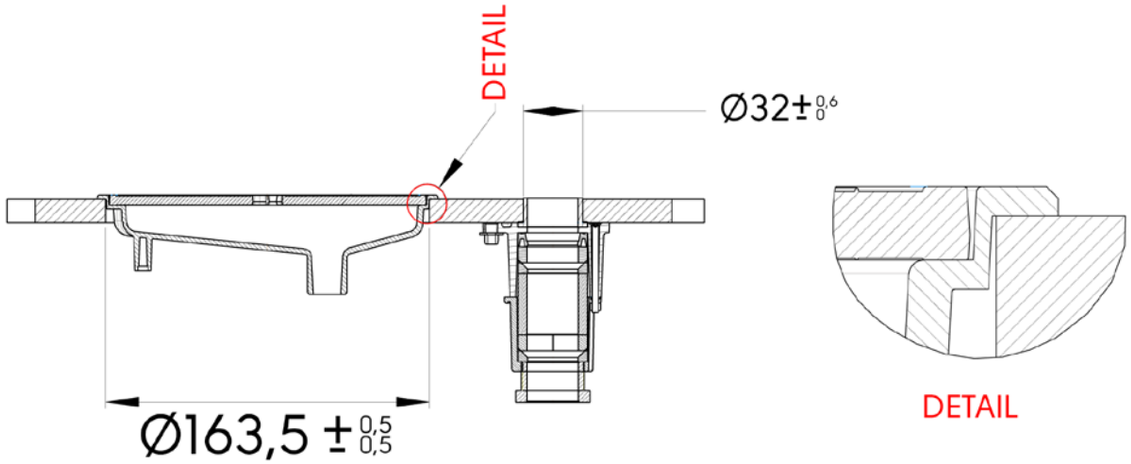

SIDE

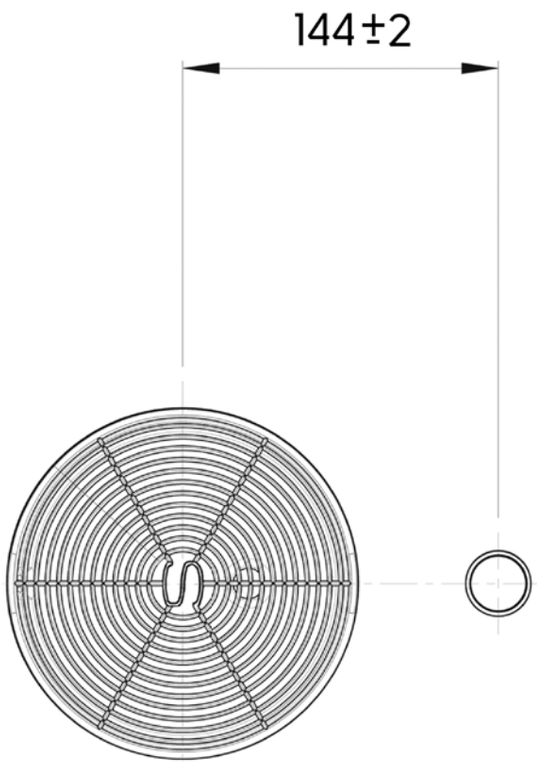

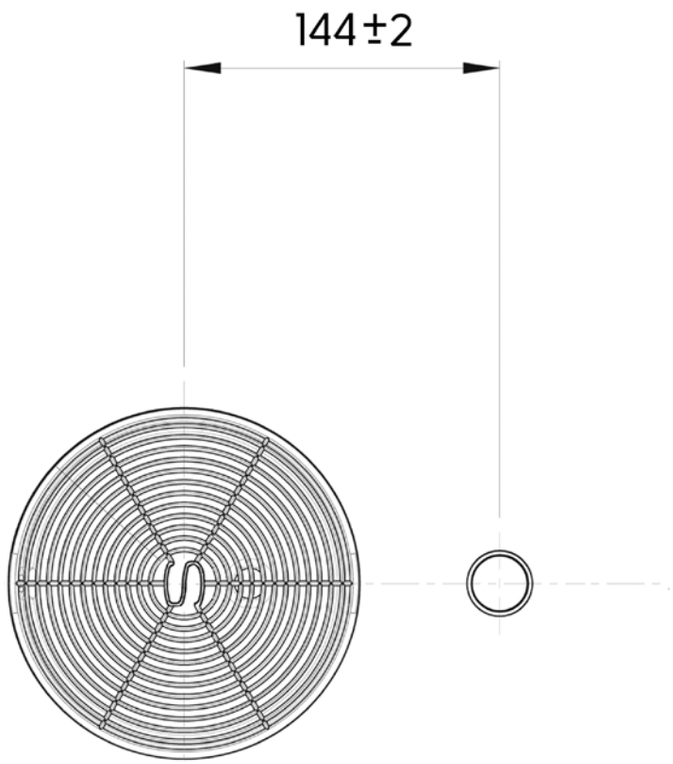

TOP

Flush mounted
- Countersunk -
Driptray 2006162

1

Top mounted
- With Lip -
Driptray 2006162_A

2

ELECTRIC

ELEKTRISK

ELEKTRISCH

電的

Electrical Requirements

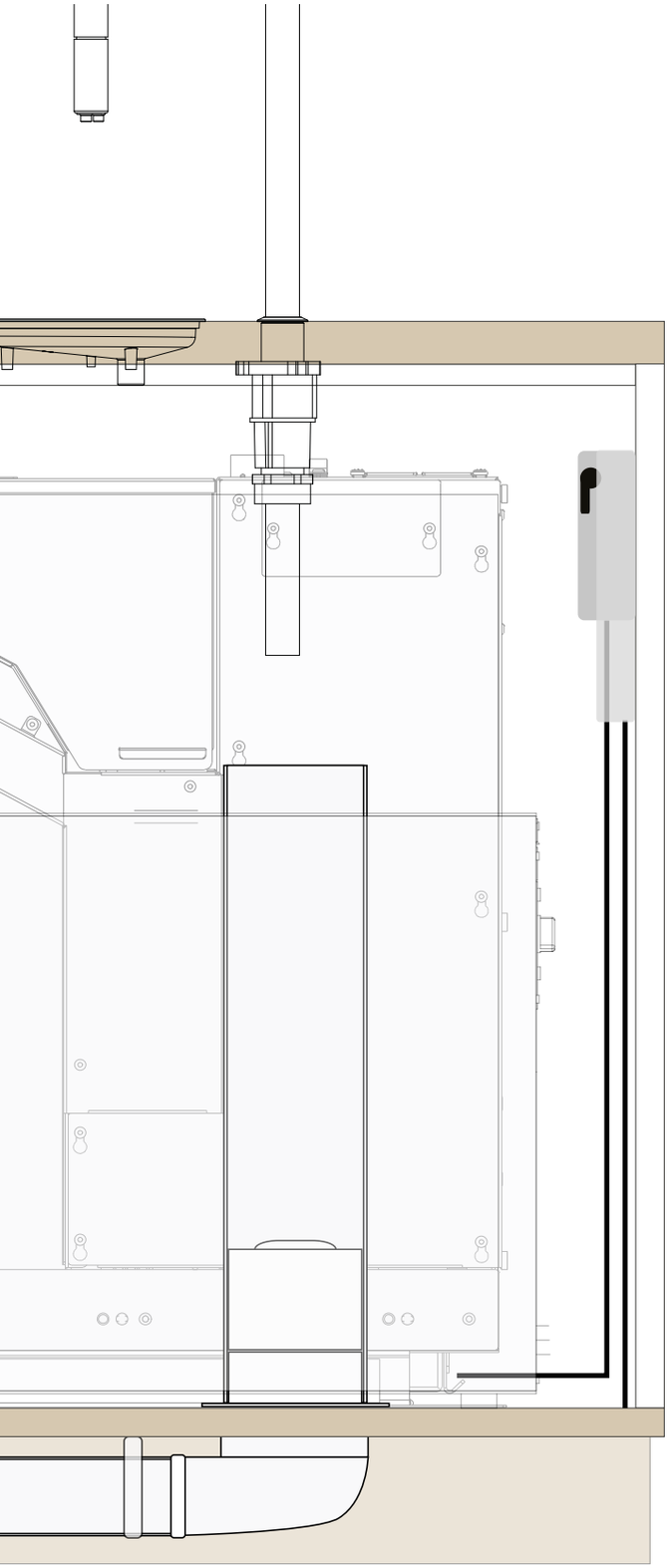

IMPORTANT
Electrical Installations to be placed here

X 4

Single phase
230V, 10 amp

US & Canada:
Single phase 115V,
60 Hz, 10 Amp

PLUMBING

VVS

KLEMPNERARBEITEN

水暖

Plumbing - adjacent cabinet

Filters

Filters are chosen based on the projected usage pattern of the machine. Distance of installation relative to the machine are unlimited. An example of the capacity is listed below.

Capacity:

Example: 30% bypass, °dH. 15

C150: 1390 l.
C300 2310 l.
C500: 2926 l.

- Drainline from driptray — 5 cm / 1 m
- Fridge waste water
- Drainpump from machine
- Main Water w/ shutoff valve
- *Drainline from Chocolate Rack

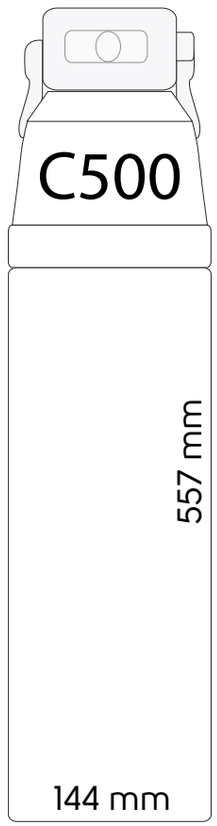

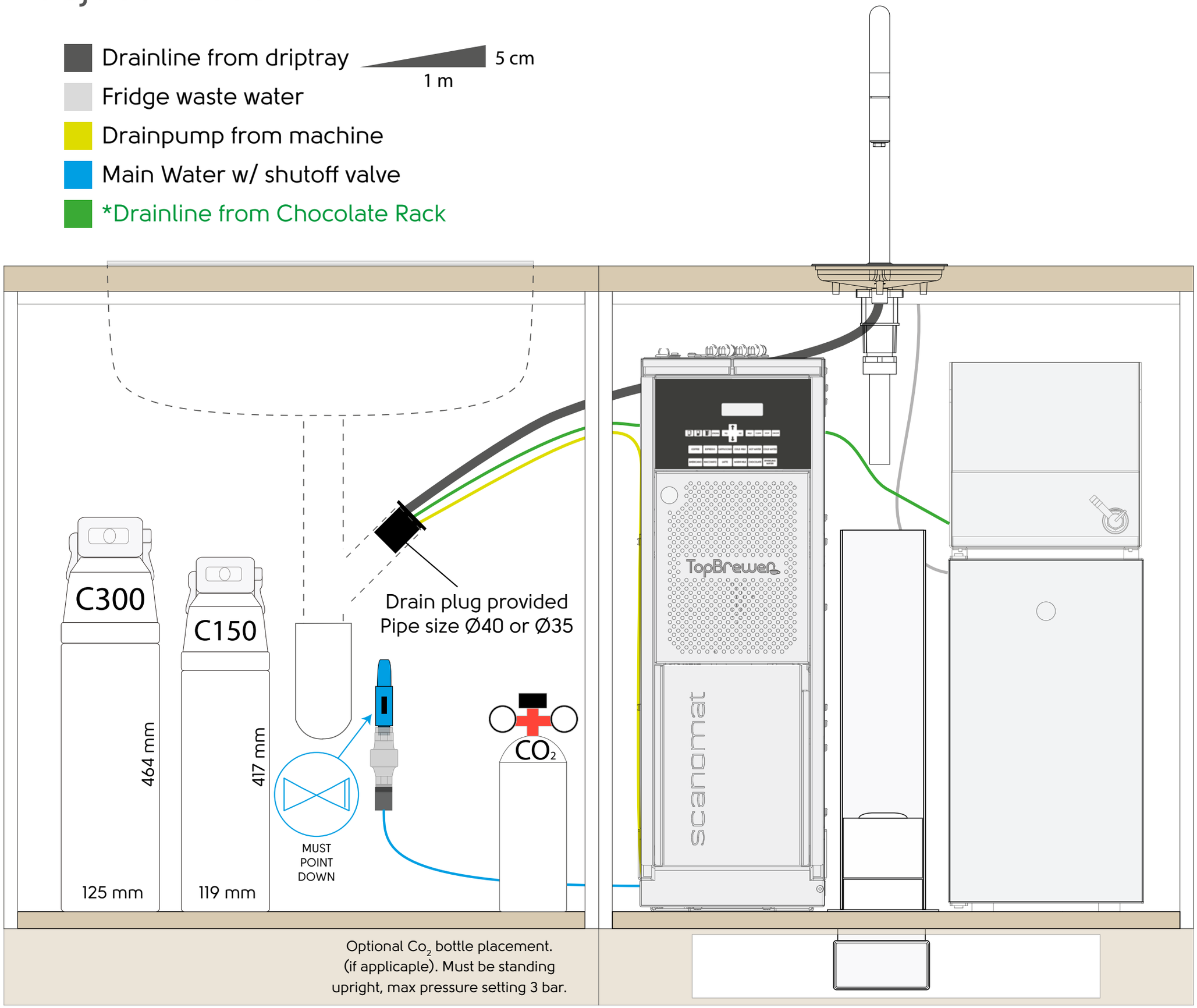

*Optional units

Plumbing - same cabinet

U-Pipe is required

- Drainline from driptray
- Fridge waste water
- Drainpump from machine
- Main Water w/ shutoff valve
- *Drainline from Chocolate Rack

5 cm
1 m

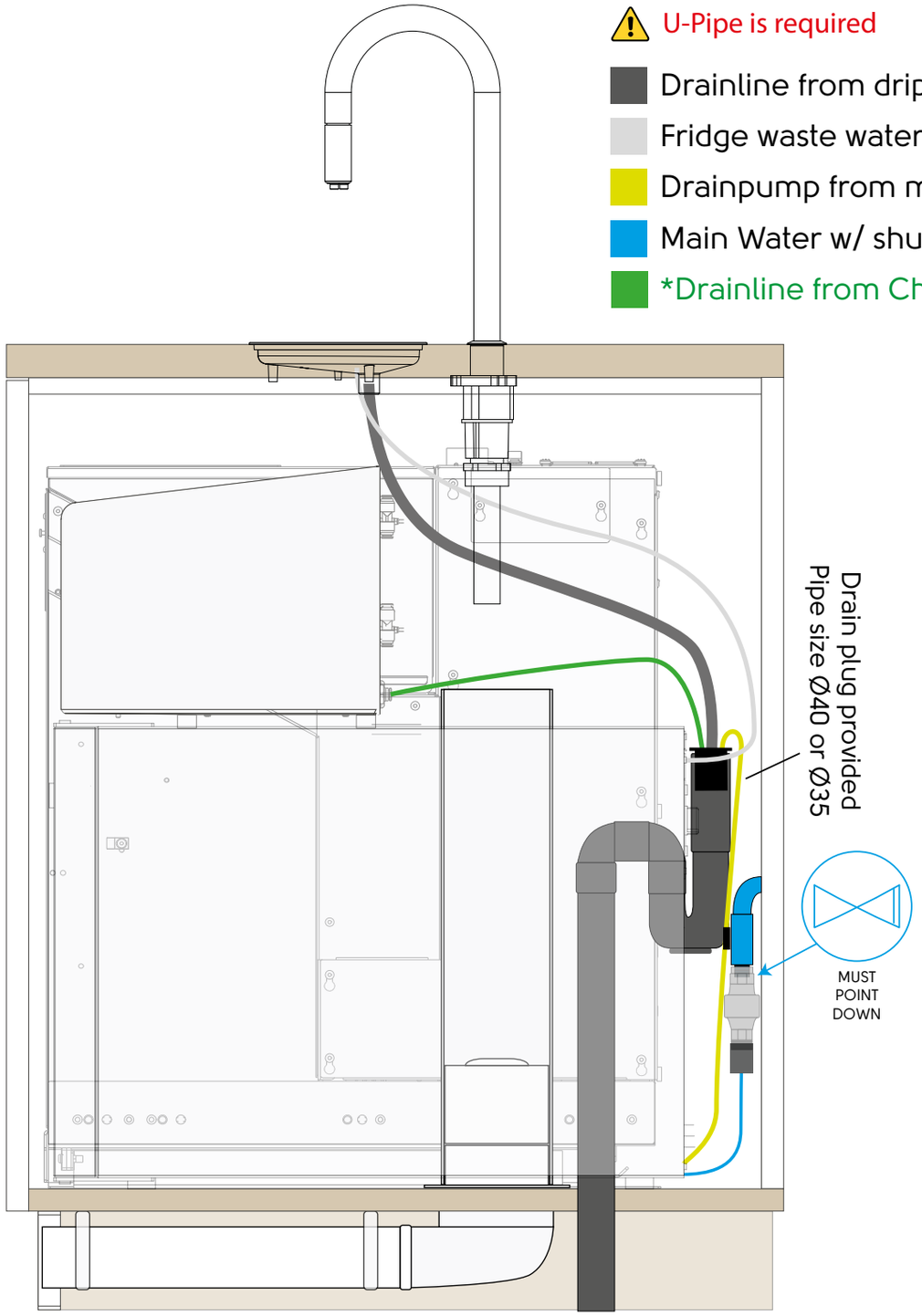

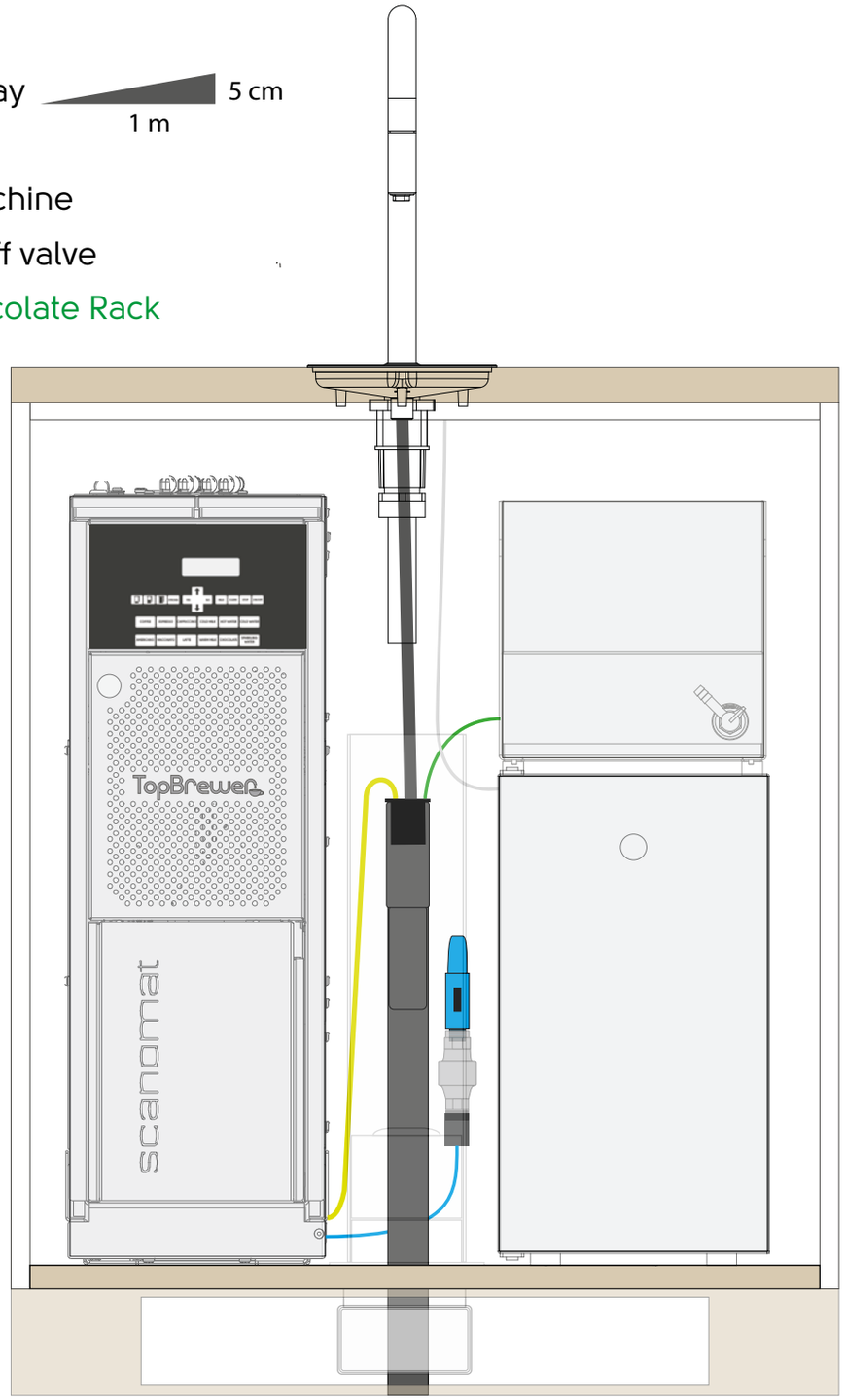

Filters

Filters are chosen based on the projected usage pattern of the machine. Distance of installation relative to the machine are unlimited. An example of the capacity is listed below.

Capacity:

Example: 30% bypass, °dH. 15

C150: 1390 l.
C300 2310 l.
C500: 2926 l.

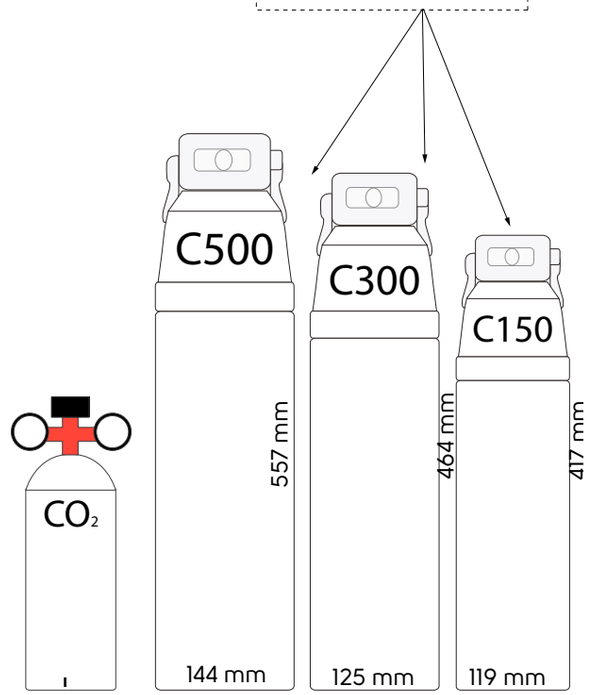

Optional Co_2 bottle placement. (if applicaple). Must be standing upright, max pressure setting 3 bar.

*Optional units

scanomat

coffee solutions for more than 50 years

For more information & questions to your installation,
contact us on the below channels

Tecnical / Architect Support
E-mail: support@scanomat.dk
Chat: www.scanomat.com
International: +454918180
Denmark: +4549181212
Sweden: +46 (0)774 41 0000
Norway: +47 22662210
UK: architect@scanomat.co.uk

Locate Dealer: scanomat.com/services/partners

For TopBrewer Pro
Version: 4.0
01-01-2020